actual size

Automotive SMD Crystal · JXG75P2

- 2 Pad Version, 7.0 x 5.0 mm
- glass sealed ceramic package
- all versions are AEC-Q200 qualified
- HMR version with extended shock & vibration immunity
- RKE version withstands 100x drop test from 150 cm

RoHS 2011/65/EC — RoHS compliant
Pb — Pb free
REACH compliant
Conflict mineral free

GENERAL DATA

TYPE	JXG75P2
frequency range	5.0 ~ 50.0 MHz (fund. AT-cut)
	30.0 ~ 70.0 MHz (3rd OT AT-cut)
frequency tolerance at 25 °C	±30 ppm, ±50 ppm
load capacitance C_L	12 pF standard (option: 10 pF ~ 30.0 pF / series)
shunt capacitance C_0	< 7 pF
storage temperature	-40 °C ~ +125 °C
shock resistance	> 100 g (half sine pulse, 6.0 ms)*
drive level max.	100 µW (10 µW recommended)
aging	< ±3 ppm first year

* optional HMR version: 3000G / half sine pulse / 0.3 ms

ESR (SERIES RESISTANCE RS)

frequency in MHz	vibration mode	ESR max. in Ω	ESR typ. in Ω
5.0 ~ 5.999	fund. - AT	200	130
6.0 ~ 6.999	fund. - AT	100	70
7.0 ~ 9.999	fund. - AT	80	35
10.0 ~ 15.999	fund. - AT	60	25
16.0 ~ 21.999	fund. - AT	50	20
22.0 ~ 24.999	fund. - AT	40	20
25.0 ~ 50.000	fund. - AT	30	15
30.0 ~ 44.999	3rd OT-AT	80	60
45.0 ~ 70.000	3rd OT-AT	70	55

TABLE 1: FREQUENCY STABILITY VS. TEMPERATURE

		±30 ppm	±50 ppm	±100 ppm
-20 °C ~ +70 °C	STD.	O	O	O
-40 °C ~ +85 °C	T1	O	O	O
-40 °C ~ +105 °C	T2		O	O
-40 °C ~ +125 °C	T3			O

O available

MARKING

frequency with load capacitance code
company code / date code / internal code

date code: year/month; A ~ M: Jan. - Dec.; example 9A = 2019 January

9: 2019 0: 2020 1: 2021 2: 2022 3: 2023 4: 2024

Jan.	Febr.	Mar.	Apr.	May	June
A	B	C	D	E	F
July	**Aug.**	**Sept.**	**Oct.**	**Nov.**	**Dec.**
G	H	J	K	L	M

DIMENSIONS

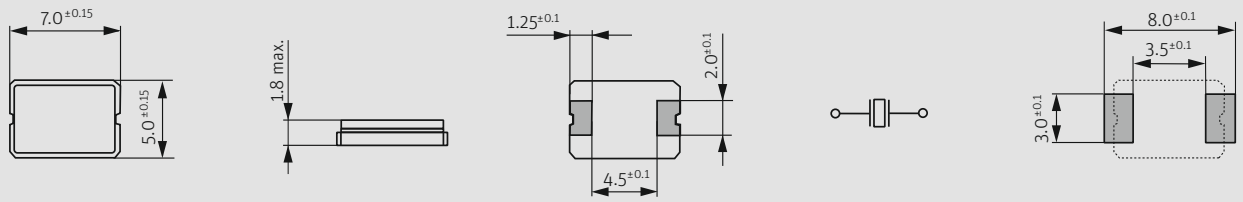

top view | side view | bottom view | crystal connection | pad layout | in mm

ORDER INFORMATION

Q	frequency	–	type	–	load capacitance	–	tolerance at 25 °C	/	stability vs. temp. range	–	option 1	–	option 2
Quartz	5.0 ~ 70.0 MHz		JXG75P2		12 pF standard 10 pF ~ 30 pF S for series		30 = ±30 ppm 50 = ±50 ppm		30 = ±30 ppm 50 = ±50 ppm 100 = ±100 ppm		blank = -20 °C ~ +70 °C T1 = -40 °C ~ +85 °C T2 = -40 °C ~ +105 °C T3 = -40 °C ~ +125 °C FU = for fundamental frequencies ≥ 20 MHz 3OT = 3rd overtone		AEC = AEC-Q200 qualified HMR = high mechanical reliability (3000g/half sine wave/0.3ms) RKE = for remote keyless entry (drop 100x / 150 cm)

Example: Q 28.0-JXG75P2-12-30/30-T1-FU-AEC-LF (Suffix LF = RoHS compliant / Pb free)

Jauch THE PULSE OF PROGRESS
Jauch Quartz GmbH • e-mail: info@jauch.com • full data can be found under: www.jauch.com
All specifications are subject to change without notice

TAPING SPECIFICATION

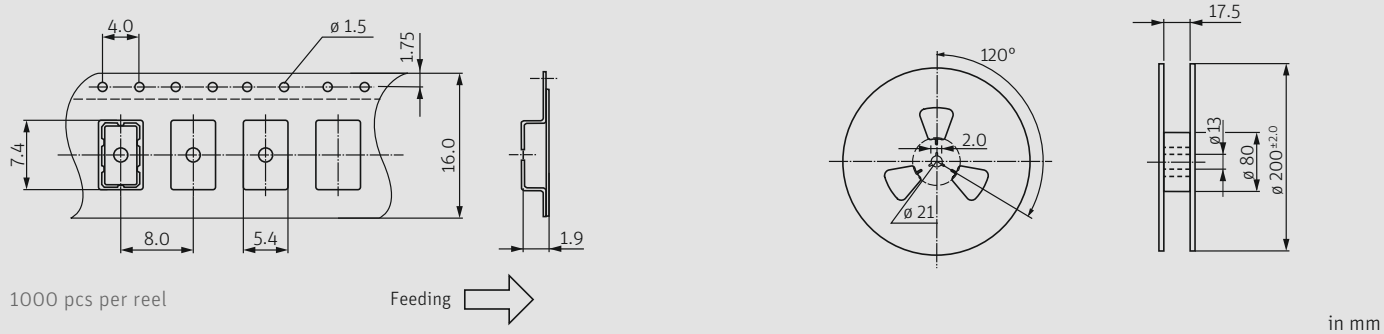

REFLOW SOLDERING PROFILE

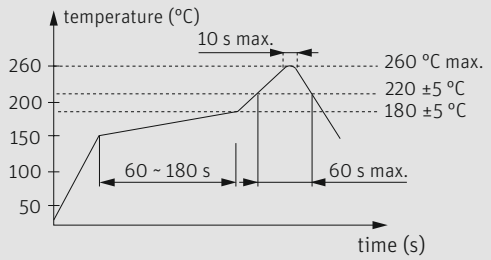

note: parts are also suitable for soldering systems with lead (Pb) content

LOAD CAPACITANCE CODES

8 pF: k	14 pF: x	22 pF: g	series: s
9 pF: n	15 pF: j	24 pF: d	T: 3rd OT
10 pF: h	16 pF: b	25 pF: r	
11 pF: l	17 pF: t	27 pF: w	
12 pF: a	18 pF: f	30 pF: .	
13 pF: v	20 pF: c		

example 8.0 MHz / 12 pF: 8a000

Jauch Quartz GmbH • e-mail: info@jauch.com • full data can be found under: www.jauch.com
All specifications are subject to change without notice